Reg. No. [ ][ ][ ][ ][ ][ ][ ][ ][ ][ ] **[14ME44]**

FOURTH SEMESTER B.TECH EXAMINATION, JUNE – 2016

DESIGN OF MACHINE ELEMENTS -I

Time: 3 Hours **Maximum Marks:70**

Instructions:

1. Answer any **FIVE** full Questions by choosing at least two questions from each part.
2. Missing data may be suitably assumed.
3. Use of machine design data hand book is permitted.

PART - A

1. a. Draw the stress strain diagram for **05**

- **i.** Steel
- **ii.** CI
- **iii.** Al and represent the silent points

b. A point of structural member subjected to plane stress as shown in Fig 1b. Determine the **09**

- **i.** Normal and tangential stress intensifies in plane MN inclined at 45°
- **ii.** Principal stresses and their directions
- **iii.** Maximum shear stress and direction of the planes on which it occurs

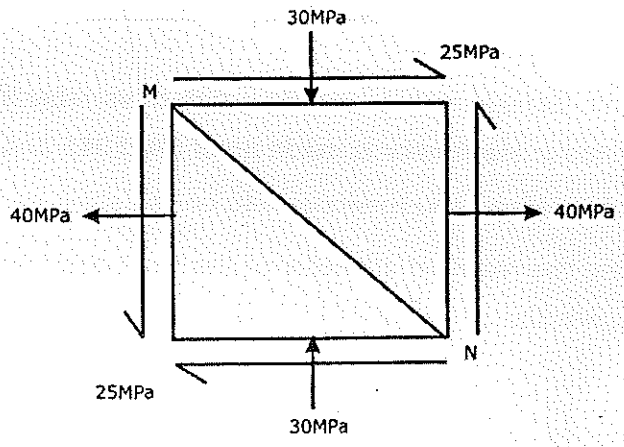

Fig. 1(b)

2. a. State the following theories of failure with suitable sketch, **06**

- **i.** Maximum normal stress theory
- **ii.** Maximum shear stress theory
- **iii.** Distortion theory

b. Stresses induced at a critical point in a machine component made of steel 45C8 are as follows. **08**

$\sigma_x = 100MPa, \sigma_y = 40MPa, \tau_{xy} = 80MPa$ calculate in the FOS by:

i. Max normal stress theory

ii. Max shear tress theory

iii. Distortion theory

3. a. What is stress concentration factor? How can it be minimized? **04**

b. Determine the maximum stress involved in the grooved shaft shown in Fig 3(b). If it is subjected to **10**

i. An axial load of 40KN

ii. A bending moment of 400N-m and

iii. A twisting moment of 500N-m. Take stress concentration in to account.

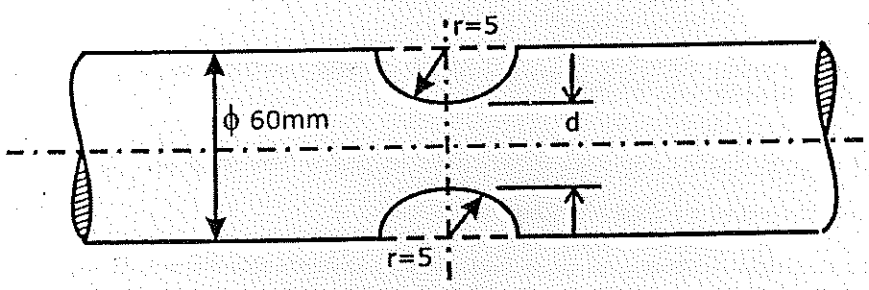

Fig. 3(b)

4. a. Define endurance limit. Explain with a suitable graph of variable loading. **06**

b. A shaft of general purpose machinery is made up of SAE1045 annealed stress $(\sigma u = 586MPa, \tau_y = 180MPa)$. The torsional load on the shaft vary from 100N-m to 400N-m. Determine the required diameter of the shaft assuming FoS =2.5, e_j=0.6, e_{sr}=0.85, e_{sz}=0.62. **08**

PART - B

5. Design a shaft of the armature of a motor if the magnetic pull on the shaft of equivalent to an uniformly distributed load of 10N per mm length over the middle one third of the 600 mm length of the shaft between bearings. The motor transmits a power of 15KW at 1200rpm. The allowable shear stress is 50MPa Choose k_d=1.5 k_t=1.25. **14**

6. a. A rectangular sunk key 14mm. wide × 10mm thick × 75mm long is required to transmit 1200N-m torque from a 50mm diameter solid shaft. Determine whether the length is sufficient or not. If the permissible shear stress and the crushing stress are limited to 56MPa and 168 MPa. **05**

b. Design a knuckle joint for a tie rod of circular section to sustain a maximum pull of 70 kN. The ultimate tensile stress of the material of the rod against tearing is $400N/mm^2$. The ultimate tensile and shearing strength of the pin of material are $510N/mm^2$ and $396N/mm^2$ respectively. Determine the tie rod section and pin section. Take FoS as 6. **09**

7. a. Explain in detail, the various possible modes of failure of riveted joints. **05**

b. A 16 mm thick plate is welded to a vertical support by two fillet welds as show in Fig.7b. Determine the size of the weld if the permissible shear stress for the weld material of 75MPa. **09**

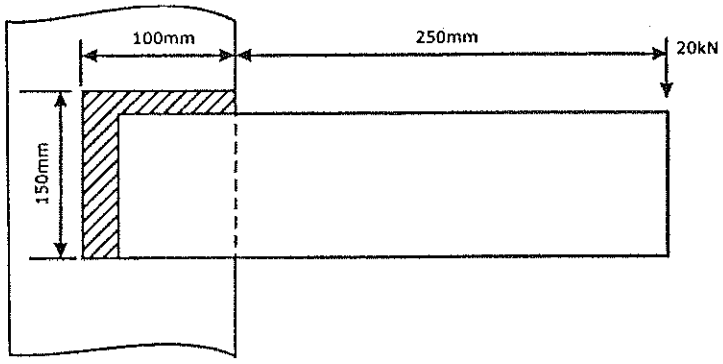

Fig. 7(b)

8. a. What is self-locking and overhauling screw? **05**

b. A power screw for a jack has square threads of proportion 50x42x8. The μ of the threads is 0.1 the collar is 0.2. Determine the weight that can be lifted by is jack through a human efforts of 400N through a hand lever of span 400mm. **09**